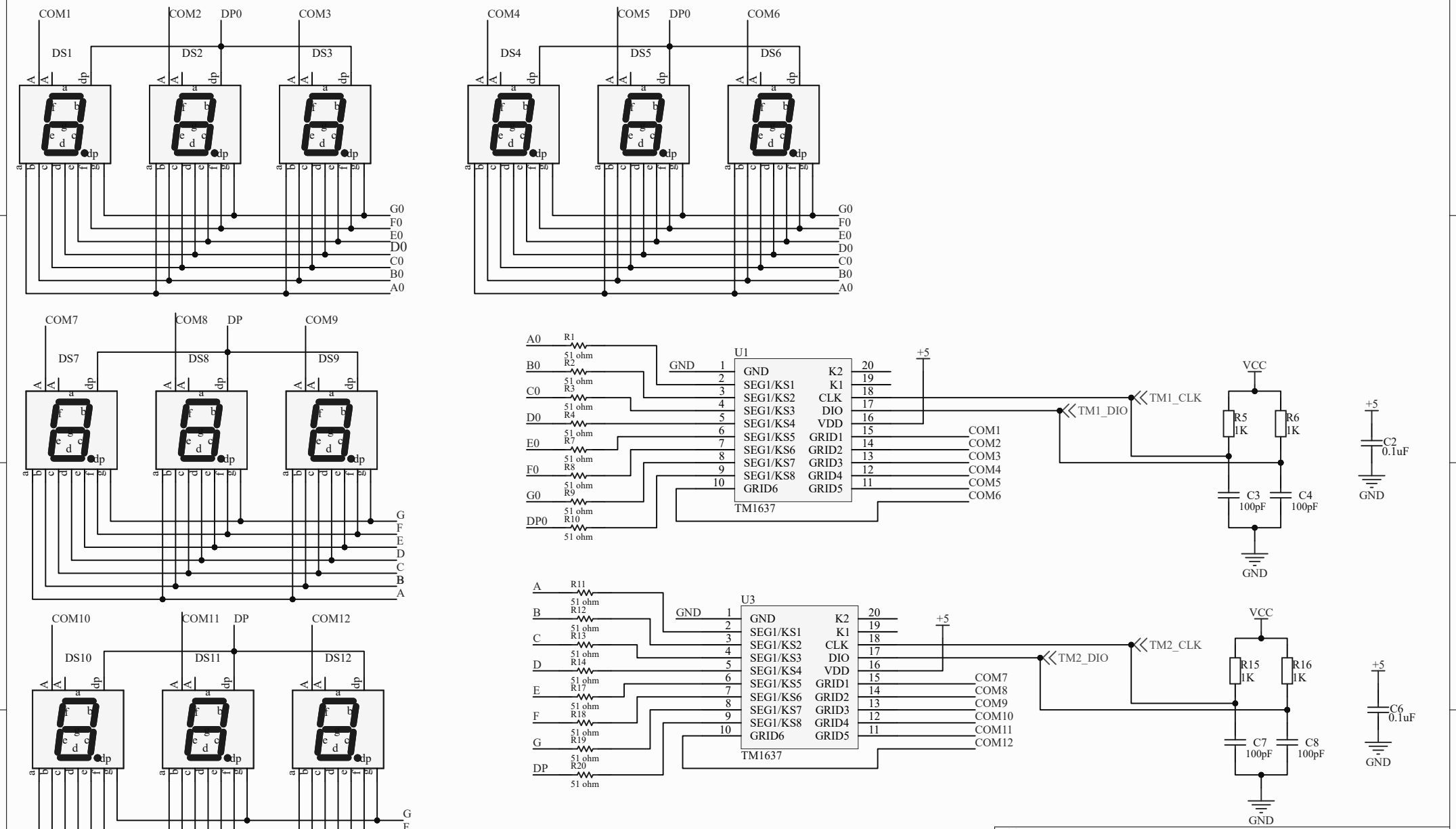
COM1
COM2
DP0
COM3
DS1
DS2
DS3
COM4
COM5
DP0
COM6
DS4
DS5
DS6
G0
F0
E0
D0
C0
B0
A0
COM7
COM8
DP
COM9
DS7
DS8
DS9
G
F
E
D
C
B
A
COM10
COM11
DP
COM12
DS10
DS11
DS12
U1
TM1637
GND
SEG1/KS1
SEG1/KS2
SEG1/KS3
SEG1/KS4
SEG1/KS5
SEG1/KS6
SEG1/KS7
SEG1/KS8
GRID6
K2
K1
CLK
DIO
VDD
GRID1
GRID2
GRID3
GRID4
GRID5
+5
TM1_CLK
TM1_DIO
VCC
R5 1K
R6 1K
C2 0.1uF
C3 100pF
C4 100pF
GND
R1 51 ohm
R2 51 ohm
R3 51 ohm
R4 51 ohm
R7 51 ohm
R8 51 ohm
R9 51 ohm
R10 51 ohm
U3
TM1637
TM2_CLK
TM2_DIO
R15 1K
R16 1K
C6 0.1uF
C7 100pF
C8 100pF
R11 51 ohm
R12 51 ohm
R13 51 ohm
R14 51 ohm
R17 51 ohm
R18 51 ohm
R19 51 ohm
R20 51 ohm
Title
Size
A4
Number
Revision
Date: 10/17/2025
Sheet of
File: D:\Paras Dave\..\ANALYSER DISPLAY.SchDoc
Drawn By:

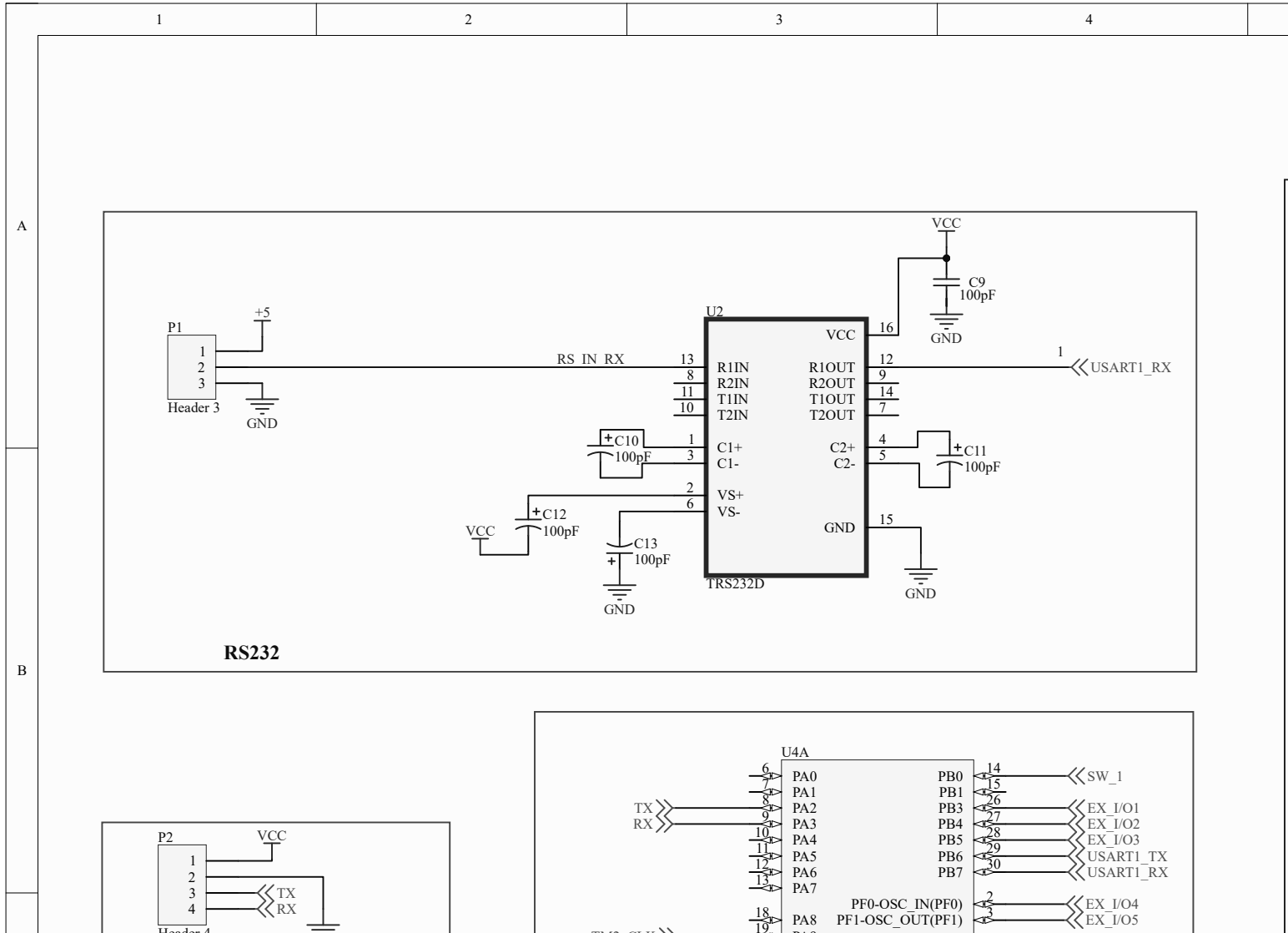
1
2
3
4
A
B
VCC
C9
100pF
GND
P1
+5
Header 3
GND
U2
RS_IN_RX
13
8
11
10
R1IN
R2IN
T1IN
T2IN
VCC
16
R1OUT
R2OUT
T1OUT
T2OUT
12
9
14
7
1
USART1_RX
C10
100pF
1
3
C1+
C1-
C2+
C2-
4
5
C11
100pF
2
6
VS+
VS-
C12
100pF
VCC
C13
100pF
GND
GND
15
TRS232D
GND
RS232
P2
VCC
1
2
3
4
TX
RX
Header 4
U4A
6
7
8
9
10
11
12
13
PA0
PA1
PA2
PA3
PA4
PA5
PA6
PA7
TX
RX
PB0
PB1
PB3
PB4
PB5
PB6
PB7
14
15
16
27
28
29
30
SW_1
EX_I/O1
EX_I/O2
EX_I/O3
USART1_TX
USART1_RX
PF0-OSC_IN(PF0)
PF1-OSC_OUT(PF1)
2
3
EX_I/O4
EX_I/O5
18
19
PA8

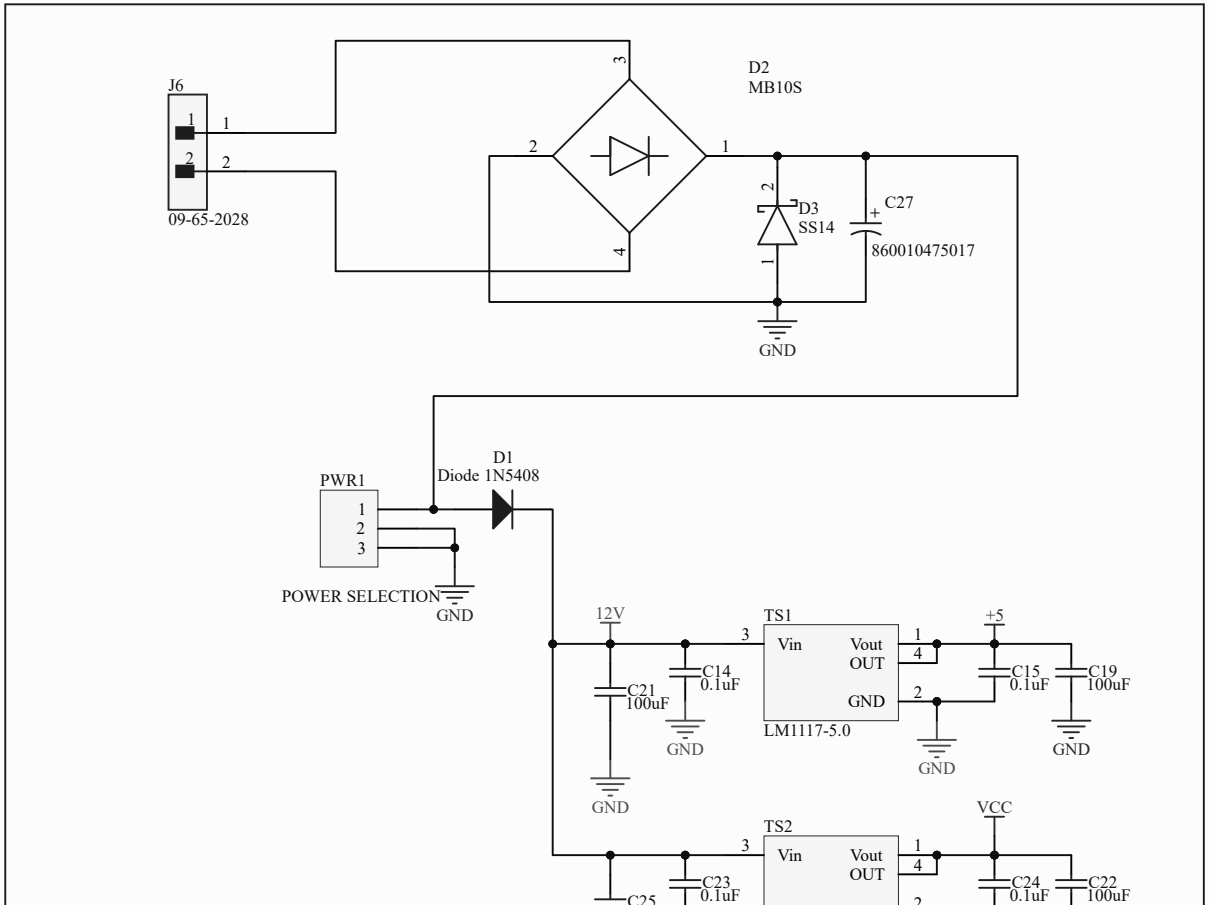
J6
1
2
09-65-2028
D2
MB10S
3
2
1
4
D3
SS14
C27
860010475017
GND
PWR1
1
2
3
POWER SELECTION
GND
D1
Diode 1N5408
12V
C21
100uF
C14
0.1uF
GND
TS1
Vin
Vout
OUT
GND
LM1117-5.0
+5
C15
0.1uF
C19
100uF
GND
VCC
TS2
Vin
Vout
OUT
C23
0.1uF
C24
0.1uF
C22
100uF
C25

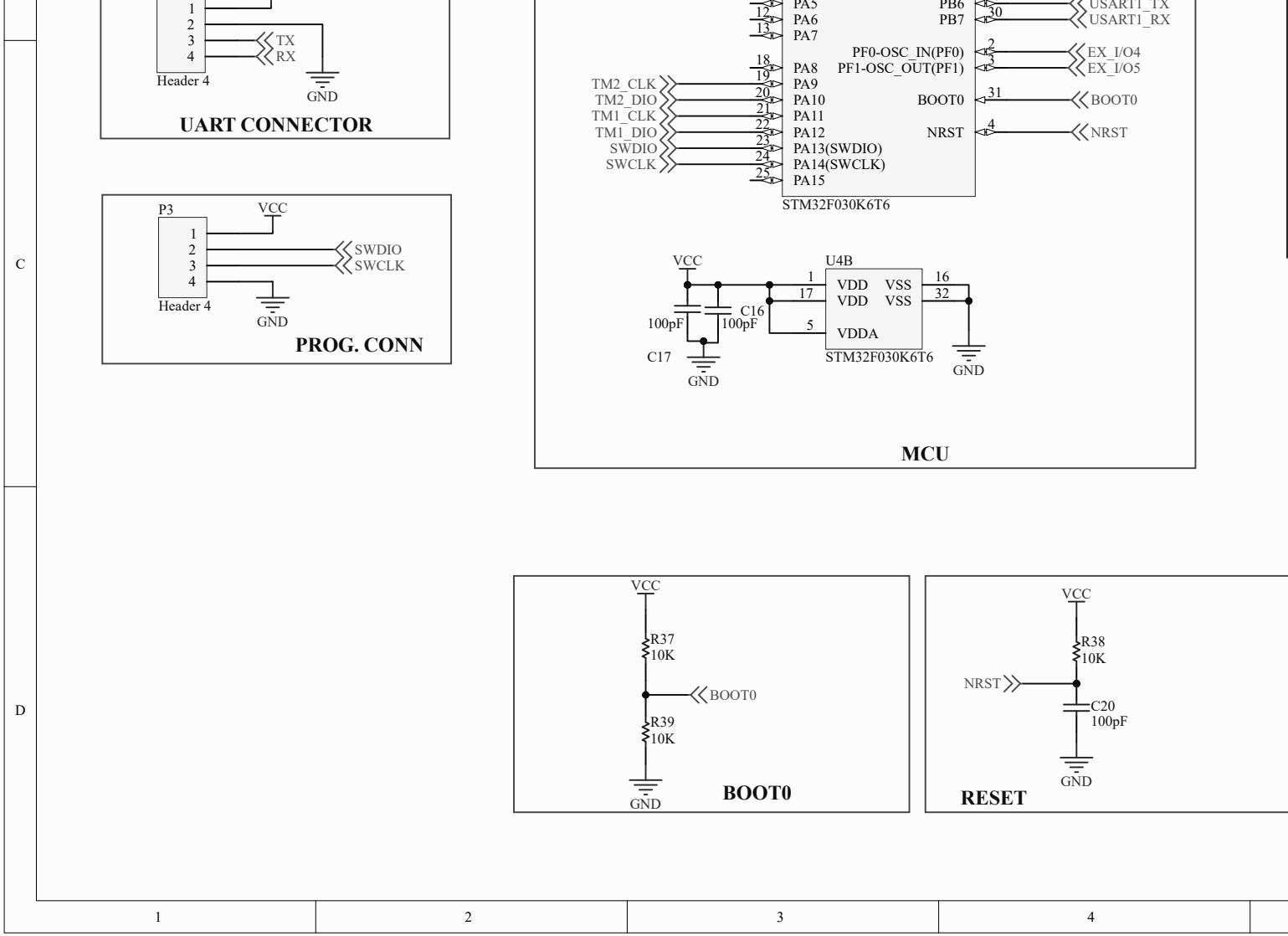
UART CONNECTOR
Header 4
TX
RX
GND
PROG. CONN
P3
VCC
SWDIO
SWCLK
Header 4
GND
MCU
PA5
PA6
PA7
PA8
PA9
PA10
PA11
PA12
PA13(SWDIO)
PA14(SWCLK)
PA15
PB6
PB7
PF0-OSC_IN(PF0)
PF1-OSC_OUT(PF1)
BOOT0
NRST
USART1_TX
USART1_RX
EX_I/O4
EX_I/O5
TM2_CLK
TM2_DIO
TM1_CLK
TM1_DIO
SWDIO
SWCLK
STM32F030K6T6
U4B
VDD
VDD
VDDA
VSS
VSS
C16
100pF
C17
100pF
GND
BOOT0
R37
10K
R39
10K
GND
RESET
R38
10K
NRST
C20
100pF
GND

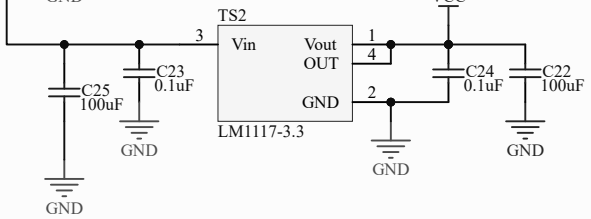

Power Supply

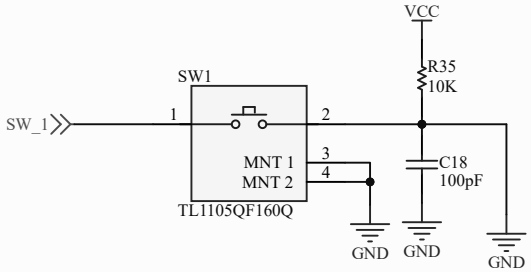

USER SWITCH

Title		
Size A3	Number	Revision
Date: 10/17/2025	Sheet of	
File: D:\Paras Dave\..\ANALYSER_DISPLAY.SchDoc	Drawn By:	

5 6 7 8